CUSTOMER SIGNATURE:	DATE:

IN AN EFFORT TO ENSURE ACCURACY, PLEASE REVIEW YOUR DRAWING DIMENSIONS AND FITTING SIZES FOR POSSIBLE ERRORS AND OMISSIONS. CALL WITH ANY CORRECTIONS BEFORE SIGNING THIS DRAWING. ALL TANKS DESIGNED AND/OR BUILT, IN PART OR COMPLETE, BY ALUMITANK OR ANY OF ITS PEOPLE ARE CERTIFIED FOR USE ONLY WITH DISTILLATE, HYDRAULIC, OR WATER. ANY VARIATIONS OF USE OR MODIFICATIONS OF THE TANK ARE PROHIBITED. CUSTOMER SIGNATURE ON DOCUMENT/DRAWING INDICATES AGREEMENT BY SIGNER OR RECIPIENT OF TANK AND HOLDS ALUMITANK HARMLESS.

CUSTOMER NAME:	SIDE OF TRUCK:	SHOP #:	PARTS:
FINISH:	CAPACITY:	SERIAL #:	
CHASSIS STYLE:		SHIP DATE:	

We highly recommend using some of the following parts:

Part Number	Description	Price
MTG-GM15-BK	Black powder coated strap for 15" tapered bottom tank	$45 each
MTG-GM15-SS	Stainless steel strap for 15" tapered bottom tank	$60 each
MTG-GM15-IK	15" GMC Insulator Kit	$45 each

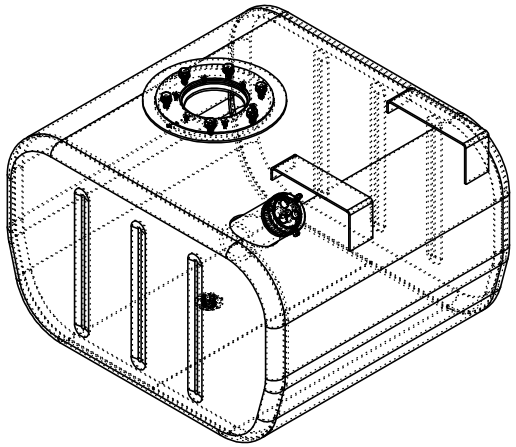

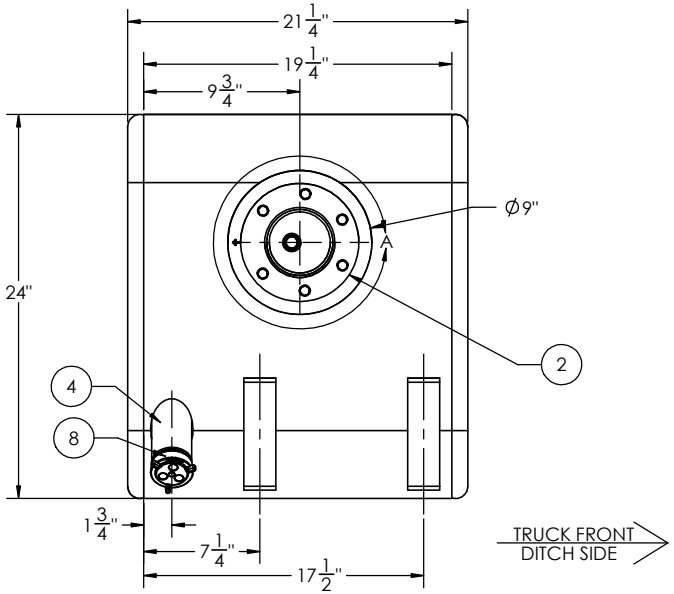

CAUTION:
VERIFY RISER PLATE HOLE SIZE AND HOSE DIRECTION RELATIVE TO ARROW

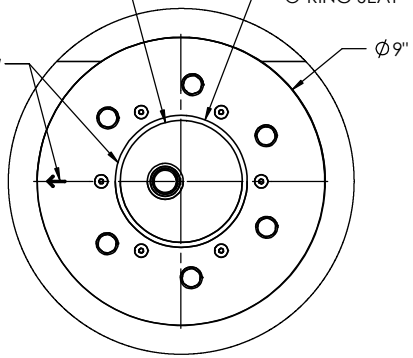

DETAIL A
SCALE 1 : 3
GASKET REMOVED FOR CLARITY

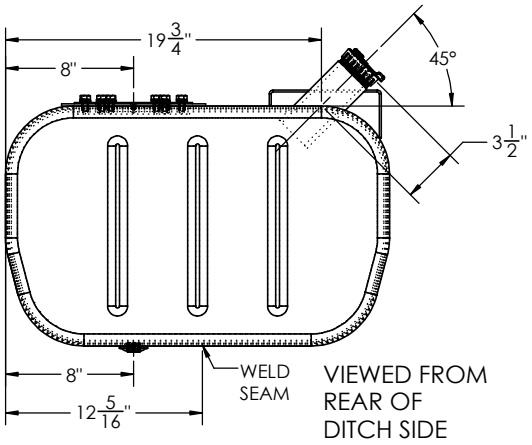

VIEWED FROM REAR OF DITCH SIDE

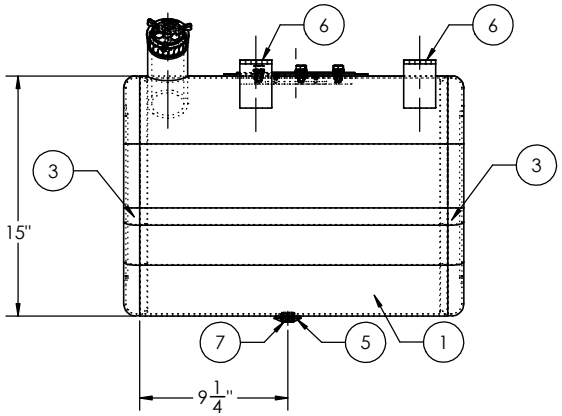

ITEM NO.	PART NUMBER	DESCRIPTION	AT-GM-4003/QTY.
1	BRL-GM-4003	1/8" TANK BARREL	1
2	ADP-732210	MILGRADE ALUMINUM GMC FLAT RISER PLATE	1
3	ECP-024038412500	15" X 24" MILGRADE ALUMINUM TAPERED BOTTOM END CAP	2
4	FLN-0961012230	6" LONG - 2" NPSM - 11.5 TPI MILGRADE ALUMINUM FILL NECK	1
5	FLG-050220	1/2" NPTF MILGRADE ALUMINUM FLANGE	1
6	CLP-2	GM UPPER STEP CLIP	2
7	94135	1/2"NPTF SOCKET HEAD PIPE PLUG	1
8	FCP-1330 (600133)	2" NON-VENTED, NON-LOCK CAP	1

TITLE:

SIZE	REV	QC	INITIALS
C		PSI	
		DIMS	
		PARTS	
		TAG	
		PKG	

PROPRIETARY AND CONFIDENTIAL
THE INFORMATION CONTAINED IN THIS DRAWING IS THE SOLE PROPERTY OF ALUMITANK. ANY REPRODUCTION IN PART OR AS A WHOLE WITHOUT THE WRITTEN PERMISSION OF ALUMITANK IS PROHIBITED.

UNLESS OTHERWISE SPECIFIED:
DIMENSIONS ARE IN INCHES
TOLERANCES:
FRACTIONAL ±
ANGULAR: MACH ± BEND ±
TWO PLACE DECIMAL ±
THREE PLACE DECIMAL ±
INTERPRET GEOMETRIC TOLERANCING PER:
MATERIAL 5052 H32 ALUMINUM
FINISH SEE BOM
DO NOT SCALE DRAWING

	NAME	DATE
DRAWN		
CHECKED		
ENG APPR.		
MFG APPR.		
Q.A.		

COMMENTS:

AlumiTank®
THE FUEL TANK SPECIALISTS
11317 N. US HWY 14
HARVARD, IL 60033
815-943-6649
800-652-6630
FAX 855-774-6918
WWW.ALUMITANK.COM
INFO@ALUMITANK.COM

DWG. NO. AT-GM-4003

SCALE: 1:6 | WEIGHT: | SHEET 1 OF 1